GT1-39RODI Aquarium RO System

Contents

WARNING:

For correct operation of this appliance, it is essential to observe the manufacturer's instructions.

I. Before You Begin

Quick Connect Fittings: If you come across a push-fit fitting, you need to firmly push the tubing into the opening until you feel a "click" which signifies that the tubing has pushed through the internal O-ring and is seated correctly. If leaking occurs, it may be due to roughly cut tubing OR the tubing is not pushed in far enough. To remove tubing from push-fit fittings, depress the floating collet (shown in below photo), then pull the tubing out.

II. Important Note:

Laws and regulations prevent us from wet-testing these filtration systems prior to sending them out. Therefore, during assembly of these systems they are not pressure tested so it is possible to have a small leak in a connection (which is simply fixed by re-seating the tubing or tightening a fitting). As the filters are dry packed, the systems will require flushing before first use.

Reverse Osmosis Filtration

I. Overview

The Reverse Osmosis Membrane is the workhorse of any RO system. It is constructed from a wrapped semi-permeable membrane material that uses pressure to separate impurities such as ions, minerals and other larger molecules from the water, carrying them to waste.

*Reverse Osmosis membranes do not have a litre Capacity for filter replacements due to the variables that can make the filter life vary significantly. This is mostly due to the water quality. The most accurate way to test a RO membrane for effectiveness is to use a TDS Meter. TDS meters measure the total dissolved solids in ppm in the water. To test your membrane, get a baseline reading out of your tap (unfiltered water) and then compare that to a reading directly off the membrane (disconnect the tube before it goes into the post filter cartridge). You can expect to get a difference of approx. 90-98% between the readings which indicate that the membrane is functioning correctly. If this % is beginning to drop below 90% it suggests that the RO membrane requires replacement

II. Feed Water Conditions

- Pressure: 50 - 100 psi
- TDS: <2,000 mg/L
- Hardness: <250mg/L
- Iron: <0.02
- Manganese: <0.01
- Temperature: 1°C - 26°C

Installing Inlet Fitting

I. Kitchen Diverter Valve (Not Supplied)

This fitting adapts to most kitchen taps that have either a 22mm Male Thread or a 24mm Female Thread. There are some taps on the market that are not compatible with diverter valves so please check before purchase. Firstly, unscrew the aerator from your tap. If this exposes a male thread, simply screw the diverter valve straight onto the tap (ensure the black rubber washer is inside the valve). Usually hand

tightening is sufficient but gripping tools may be required depending on the tap. NOTE: The knurled section of the diverter valve (top swivel ring) is the part that will tighten, you must tighten this to the tap, not the whole valve. You will know if the diverter has sealed on the washer if you will be able to swivel the valve from side to side but you should feel some resistance. If the valve swivels freely and does not feel secure – you may not have added the black washer, the tap thread may be too long (in which case, you can double up using the existing washer from the aerator you just removed) or it has not been tightened enough at the knurled section. If you need to use the thread adaptor to install to a female threaded tap, install the adaptor into the diverter valve first, then install it onto the tap.

The Diverter Valve is designed to replace your existing aerator so should be left installed permanently. Below is an example graphic. The tubing is usually supplied connected to the valve but there are instructions below showing this process if required.

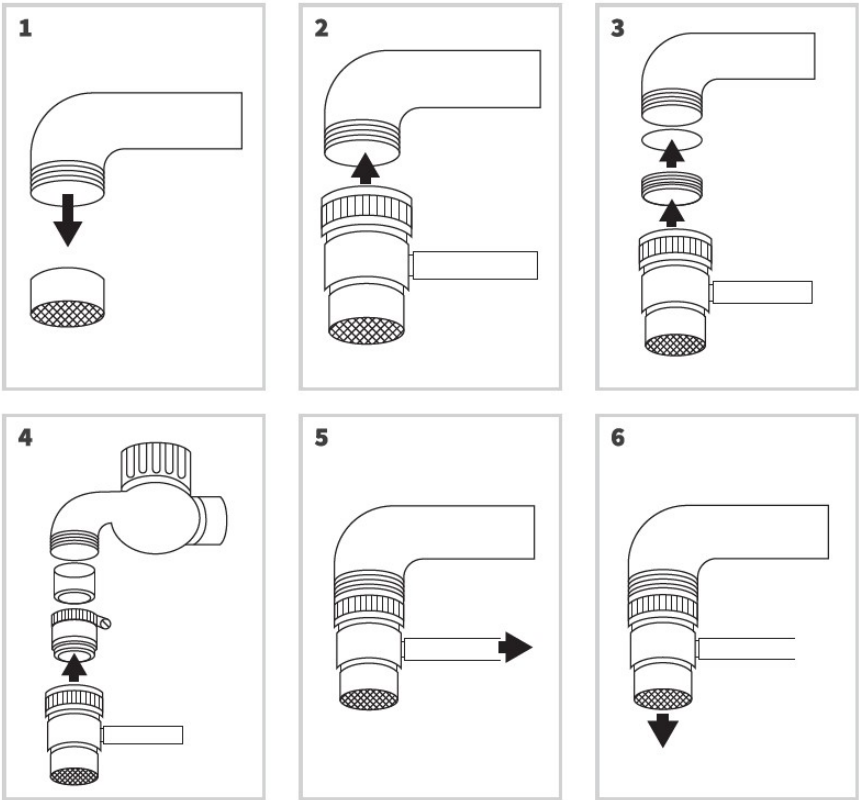

II. ¾" Garden Tap Adaptor (Supplied as Standard)

The garden tap adaptor is simple, just screw it onto an outdoor tap ¾" thread

III. Washing Machine Block Adaptor (Supplied as Standard)

Similar principle to the Kitchen Diverter Valve but this time, you firstly turn off the cold water to your washing machine (lay a towel down for water leakage). Using either your hands or a pair of gripping tools, slowly unscrew the washing machine hose which will begin to leak water due to static pressure. Install the laundry block (large Chrome Fitting) in place (ensure that the washers are used so it seals). If you find that the thread on the adaptor is not long enough – remove one of the blocks and steal the washer (only 1 block is required, 2 are supplied for this reason) – doubling up the washer is usually enough to provide an adequate seal. You do not need to use thread tape to do the above steps.
Once the block is securely installed, use standard white plumbers' tape to wrap the male thread of the small inline valve supplied with the adaptor – you will need to wrap around 8 – 10 times. Carefully screw the valve into the female port on the adaptor using a shifter/spanner until firmly installed. While the valve is in the 'off' positing (90° angle to the water flow), slowly turn the cold water back on and check for leaks.

IV. Connecting Tubing Using Compression Fittings

Compression fittings are used in both the Kitchen Diverter Valve & the Washing Machine Adaptor. Rather than an o-ring seal with teeth (like the quick connect fittings), compression fittings crimp the tubing around a stem to seal the water, the compression ring then prevents the tubing from being removed. Inserting the

tubing over the stem of the compression fitting can sometimes be difficult as the tubing needs to stretch over it, if you are having trouble, you can run the end of the tubing under warm water (not hot) to help soften the tubing. The below diagram demonstrates how this it to be installed.

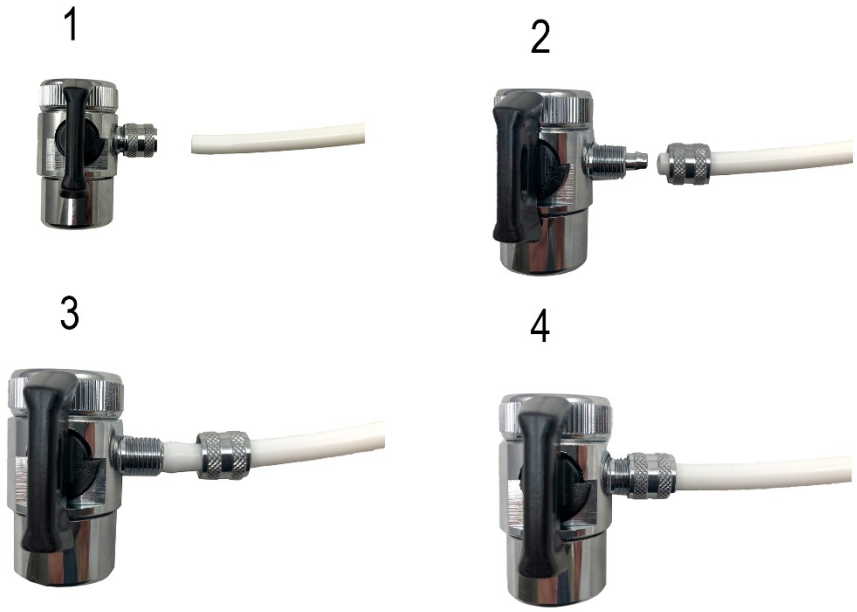

System Installation/Start-Up

I. Pre-Flushing

To pre-flush the filter, firstly plug the tubing joining the inlet valve to the inlet port of the system. Turn on the inlet feed water to maximum, this will flush the system. For more thorough/quick flushing, disconnect the outlet of the carbon filter where the white tubing plugs into the end cap of the RO membrane and aim the hose into the sink. This will flush the filter at full speed/pressure rather than the slow speed of the RO membrane.

Note: As this system is a DI unit, it is ideal to disconnect the DI cartridge while the membrane is flushing (approx. 30 mins of flushing or until the 'In' TDS reading reduces to a stable acceptable level). Once the membrane has adequately flushed, you can reconnect the yellow tubing to the final stage DI filter.

II. Tubing Connections

Following the above flushing process, check your systems fittings and tubing to ensure everything looks sound; there are no kinks, damaged fittings or tubing that is not plugged in. Connect the inlet filter to the inlet side of the membrane (screw cap end). You should have 2 lengths of tubing that are only connected at one end, these lines will be your drain line (waste water) which is connected to the inline valve marked 'Drain Line' (Black Tubing) or Flow 400/600. The other line will be the Aquarium water line which is the finished product water (Blue Tubing). Once all tubes are accounted for and everything is in order, start-up can commence.

III. Initial Start-Up

For the first run, allow both the waste and Aquarium water lines to flow to waste into a sink. Turn on the inlet water to the system on full pressure/flow. The Drain line will begin to flow almost straight away which is normal, you may notice some slight discolouration. The Aquarium water line will take longer to begin flowing, this is due to the water slowly making its way through the membrane filling the filter cannisters as it goes. 3 Stage systems generally start flowing within a few minutes. This will only happen on first use until the system is wetted, additional start ups should begin flowing relatively quickly from when the inlet it turned on.

If you have completed flushing of ALL filters as mentioned in the Pre-Flushing Section, you will only need to run your filter system for about 5 – 10 minutes.

IV. Using the System

Once the filters have settled and it is ready for use, run the drain line into the sink/drain. Your Aquarium water tube will then run into a container or tank to fill with fresh filtered DI water. It is recommended to keep the container you are filling in a water safe area – for example on the sink top in case of spillage (or more commonly – if it overflows because you forget you turned it on) so you don't come back to a flooded room. A handy tip is to use a timer the first time you use the unit and note how long it takes to fill your desired storage container. Each time you start using the system, open the manual flush valve for up to a few minutes to clear any potential TDS creep – monitor this by using the TDS meter 'inlet'.

V. Manual Flush Valve for TDS Creep

The GT1-39RODI system includes a manual flush valve built in to the flow restrictor to flush the membrane and clear any residual TDS as a result of 'TDS Creep'. TDS creep is the result of salts 'wicking' through the membrane into the permeate line while the membrane sits in stasis. This increased TDS would normally flush through into the DI filter; the flush valve allows you to open the drain line and flush all this water to waste until the TDS balances back to normal levels. This prolongs the life of the DI resin media.

To operate the manual flush correctly, do the following steps.

1. Set the TDS monitor to the inlet setting
2. Open the manual flush valve so the handle is running inline with the flow of water.
3. Turn on the incoming feed water and allow the unit to flush to waste for up to 90 seconds.
4. Close the flush valve and monitor the TDS levels on the TDS monitor to ensure they are at or below the desired level.
5. If the TDS level is still too high, open the flush valve for another 30 seconds then close and check.

VI. After Use & Storage

The system can then be stored away in a cabinet – if you have a plastic container or tub to put it in it is ideal to prevent any water leaks. You can also get plug fittings for the ends of the tubing (not supplied) to keep the system airtight.

VII. Long Periods of no use

If the system has been in storage for longer than a few days, it is best to open the manual flush valve for up to 5 minutes then close it & run the unit for 15 minutes before collecting the water or until the water TDS stabilises. Bacterial contamination is not usually an issue with intermittent use but is possible after over a month of storage. If there are any smells, tastes or changes to the water quality it is best to replace the filter cartridges and start fresh to avoid any possible issues.

TDS Monitor

I. What is TDS

Total Dissolved Solids (TDS) are the total amount of inorganic elements, including minerals, salts or metals dissolved in water, other than the pure water molecules (H2O) and suspended solids. A TDS meter works by measuring the total amount of mobile charged ions dissolved in a given volume of water, expressed in total quantity as parts per million (ppm), or in weight as mg/litre. TDS is directly related to the purity of water and the quality of water purification systems. TDS affects everything that consumes, lives in, or uses water, whether organic or inorganic, for better or for worse.

II. Installation

The DM-1 can be configured in a variety of ways, depending upon your needs. Typically, the IN line (line 1) is connected to the source (tap) water, and the OUT line (line 2) is connected to the product (filtered) water. The DM-1 can also be configured with multiple systems, such as an RO/DI combination, as well as with HM Digital's Single Inline TDS Monitor (model SM-1).

This system has pre-installed Tee fittings for measuring Post Membrane and Post DI filter.
The Red lead (in) should be installed into the tee located at the back of the system. The Blue lead (out) should be installed into the tee located on the outlet of the DI filter (right side). When inserting the probes, you will need to push them in firmly until they pass the internal o-ring and 'lock' into place. Try to orient the probes so that the pins are perpendicular to the water flow (shown in photo).

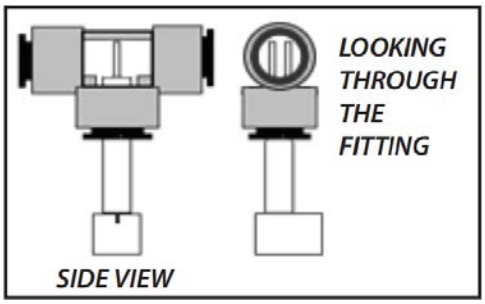

You can mount the TDS monitor wherever it is convenient using the supplied adhesive tape.

III. Usage

1. Press the "POWER" button.
2. To display the TDS level of the feed (tap) water, slide the switch to the IN side. To display the TDS level of the product (filtered) water, slide the switch to the OUT side.
3. The displayed TDS will be most accurate after approximately 10 seconds.
4. Determining filter effectiveness depends on your particular system. For an RO system, for example, compare the IN water TDS levels with the OUT water TDS.
5. If the "x10" icon appears, this means the TDS level is above 999 ppm. Therefore, multiply the reading by 10. For example, if the display shows 143 ppm with the 'x10' icon, the actual TDS level is 1430 ppm. (If the 'x10' icon does not appear, the reading on the display is the actual TDS level.) For most drinking water, you will not see the 'x10' icon.
6. Turn off the unit. It will automatically shut off after 10 minutes.

IV. Calibration

Your monitor was factory calibrated to 342 ppm. This level is suitable for most tap water/filtered water applications, so it is ready to use out of the box. However, you may need to re-calibrate based on your needs, as well as from time-to-time to ensure best results. To calibrate:

1. Purchase a certified calibration solution that is correct for your needs. The calibration solution should be NaCl. HM Digital's 342 ppm NaCl is recommended.
2. Disconnect both T-fittings from their tubes. Do not remove the sensor from the T! Ensure the orientation of the sensor to the fitting is correct, as in illustration #1. Shake any water out.
3. For better accuracy, calibrate to a flowing solution. If this is not possible, you can calibrate to a still solution. Turn on the monitor and place one T-fitting (with the sensors in it) into the calibration solution. You will get a reading. Ensure the fitting is completely filled with solution and there are no air bubbles. This step is critical for proper calibration.
4. If the reading on the monitor (for the sensor in the solution) does not match the solution, adjust the reading up or down by gently turning the plastic orange screw on the rear of the unit clockwise or counter clockwise to raise or lower the reading.
5. There is one calibration screw to calibrate both the IN and OUT sensors simultaneously. You only need to calibrate one sensor, and it does not matter which.
6. If calibrating to a still (not flowing) solution, calibrate to 3% above the level of the calibration solution. This will accommodate for the lack of flowing water, which the monitor is programmed for. For example, if the calibration solution is 342 ppm, adjust the screws until it reads 352 ppm. If you are calibrating to a flowing solution, calibrate to the level of the solution.
7. Your monitor is now calibrated. There is no need to do anything else

V. Changing Batteries

If the display is fading or the readings are not correct, you may need to change the batteries.

1. Unscrew the three metal screws (not the orange plastic screw) on the rear of the unit and remove the back panel.
2. Remove the batteries.
3. Replace both batteries with two fresh batteries (model 357A). Ensure the polarity is correct.
4. Close the back panel and replace the screws. You will not need to recalibrate.

TROUBLESHOOTING

Issue	Potential Solution(s)
"Err" display (error)	1. The water is out of the monitor's TDS range. 2. The sensor cable is loose or unplugged. Push the cable connector securely into the monitor.
Incorrect readings	1. Re-calibrate the monitor. 2. Change the batteries.
Faded display	1. Change the batteries.
The "OUT" reading is higher than the "IN" reading	1. Check your connections. The sensors may be reversed.

Maintenance

I. Sanitation

Due to the 'open circuit' nature of the portable systems, it is possible for bacterial contamination to occur over time. Tubing may need to be sanitised or replaced along with the fittings.

The membrane housing (Which is one of the only parts that doesn't get replaced) can be cleaned using warm soapy water and then soaked in HydroSil-PURE with water. Rinse off the excess HydroSil and then re-connect.

II. Replacement Parts

As mentioned above, tubing and fittings should be periodically replaced to ensure the system remains clean and functional. There is no set time frame for these items to be replaced, rather you can monitor them ongoing and if they appear to be at their end of life, change them. As a general guideline, Tubing (inlet, outlet and drain) should be replaced every 2 years. Fittings should be replaced every 3 years (due to wear and tear).

III. Replacement Filters

Filters have a varying life time but generally can be replaced with the following principle; Pre filters (Pre-Membrane) every 6 months. The DI resin will require changing whenever the TDS reading exceeds your desired level. The membrane itself has a largely varying life time. It may last anywhere between 1 and 4 years depending on usage, water quality and age. This can also be monitored by the TDS monitor.

IV. Testing Filters

Reverse Osmosis membranes have a variance in their filter life and this is affected by several things including water quality, usage, temperature and filter maintenance. As they are the workhorse of the system, they are the most important filters to monitor and keep maintained.

To measure the effectiveness of the RO membrane, test a sample of tap water (to get your base reading TDS), then check the readings on the in & out of the TDS monitor. To calculate the membrane effectiveness, you will need to subtract the percentage of contaminant reduction from the feed water. E.g. Feed Water 200mg/L TDS – RO Membrane removes 97% (+/-) Therefore, 200 – 97% = 6mg/L. Factors can influence the final TDS of the water and it will depend upon what is in the feed water to begin with. A membrane is deemed to be 'expired' if the overall reduction rate is <90% (as a general rule). To apply this to the above example, 200 – 90% = 20mg/L. So, if your test reading was approaching 20mg/L or higher, it would be time to change the membrane.

Troubleshooting

Problem	Possible Cause	Solution

Water Leaking Between fitting and tubing.	Unseated Tube	Check all tubing connections by firmly pushing them into the fitting. Check that there are no kinks or any obvious issues. If the problem persists, remove the tubing and check for a clean cut with no burs. Push the tubing back in and try again. If this does not work please contact customer support.
Water Leaking Between Fitting & Filter	Fitting not tight enough / Insufficient Thread Tape / Damaged Fitting or Filter	If the fitting appears to be not fully tightened, gradually tighten the fitting to see If this fixes the leak. If this does not work, remove the fitting and check for any signs of damage either on the fitting or the female port of the housing. If there are no obvious signs of damage, apply white plumbers' tape. Use 6 rounds for 1/8" fittings (membrane housing fittings) and 8 rounds for all other ¼" fittings.
Water Is Leaking from My Diverter Valve	1. Damaged/Missing Washer 2. Not Tight Enough 3. Thread is too Short	1. Check the diverter valve to see if the washer is inside, if it is damaged it may need replacing – this is a common size washer and can be purchased from most hardware/plumbing stores. 2. If the diverter valve is loose (or you can easily swivel the fitting without resistance, the fitting is not tightened enough. It may feel like you can't tighten it anymore and it just keeps spinning but if you use a gripping tool (multi grips) to grab the collar of the fitting and use your hand to hold the valve itself steady, you will be able to further tighten the valve. The valve is tight enough when you feel light to moderate resistance when trying to swivel the valve. 3. If you screw the valve on and the collar 'bottom's out' on the tap, you may need to add another washer (to bulk up the space).
The unit is not producing any water?	1. Water Supply is off or disconnected. 2. Pre-Filter has a blockage 3. Insufficient Water Pressure 4. Blue Plug Still Installed	1. Turn on the water supply and ensure there are no obstructions to the water flow. 2. Disconnect the tube between the membrane and pre-filter (like the pre-flushing instructions) and run water at full pressure to see if water comes out of the filter. – If the water does not come out (or is very weak pressure) the filter may need to be changed.

		3. Reverse Osmosis required 50psi (Minimum) to operate – 70psi+ is ideal. If you have lower than 50psi pressure this unit may not be suitable for you. Low Pressure Membranes are available for an additional charge that will work down to 20psi. 4. Remove the blue plug from the drinking water line.
Water is coming out slowly	Reverse Osmosis	RO filtration is a slow process, depending on the system you have purchased, you will only get about 8 – 12L of water per hour.
I am getting much more waste water than filtered water	1. Water Pressure 2. Water Quality 3. Blockage	1. Our units are designed to run at approx. 1:1 – 1:1.5 waste water ratio at 70 psi. If your pressure is lower than 70 psi, the production rate may decrease and cause more drain water than filtered water. 2. If your inlet water quality is poor and contains higher salts and hardness the filter may produce lest water than the specified amount. 3. If you have good pressure, and average water quality it is possible there is a small blockage somewhere in the system. Try to follow the water flow along the system, disconnecting 1 tube at a time to try and pinpoint where the water is 'stopping'
High pH Reading	1. Alkaline Filter 2. GAC Filter 3. Insufficient Testing Equipment	1. Alkaline Filters are designed to increase the pH of the water. When the filter is new it will be high but will soon settle to the advertised levels after adequate flushing. 2. If you have a post GAC filter (Carbon), this will naturally increase the pH of the water. pH is the measure of Hydrogen in the water and this hydrogen will vent off the water if you leave it to stand and the pH will then drop back down to the normal level. 3. pH testing equipment can range from a cheap test pen right up to lab grade equipment. Before coming to a conclusion on pH issues, it is best to ensure the equipment used to measure the pH of the RO water is of high standards and suitable for reading pH levels in low EC water (i.e. The guy at the pool

		shop is not going to cut it). We have access to high quality testing equipment and frequently test our units and conduct research. If you feel that there is an issue with your pH, please contact us.
Strange taste to the water (New System)	1. High Alkaline Filter 2. Residue 3. Contamination	1. If you are using an alkaline filter system, the unit requires adequate flushing before first use. Usually all taste is gone within a week of use. This taste is normal and in most cases is your body adjusting to the high pH water (which some people can describe as a slight metallic taste). 2. The filters are dry packed, the carbons, alkaline filters will have 'fines' on them as they are granular medias, this will go away with flushing. The membrane has a food grade preserve inside it to prevent contamination during storage, this will also flush away quickly. 3. Bacterial contamination is highly unlikely, but not impossible. If there is a strong 'foul smell' or organic taste to the water, it is possible that there is some form of contamination. Contact us straight away so we can rectify (or diagnose) the problem if there is one present.
The TDS Is Higher than the inlet water (or the same).	1. New Filter 2. Alkaline Filter 3. Expired Filters 4. Mixed Up Drain Line and Drinking Line	1. While filters are new, it is normal for the TDS to be elevated while the system is flushing. Continue flushing the system & contact support if the high TDS persists. 2. Alkaline filters will naturally increase the TDS of the water, especially when new. If you have low TDS water already, it is possible for the TDS level out of the alkaline filter to be higher than your inlet water. This is because you are adding minerals back into the water therefore increasing the TDS and alkalinity. 3. If the filters have not been changed as per the recommendations, it is likely that the increased TDS is due to the filters needing replacing. 4. This is common as sometimes the lines may be mixed up. Make sure that the tubing connected to the 'Drain Line' flow restrictor is

		being run to waste, do not use this water for drinking. Your drinking water line should be marked with either 'outlet', 'Drinking Water' or 'Aquarium Water'.
Hot Water has been run through the filter		Reverse Osmosis units are designed for cold water only. If you accidentally run hot water through the membrane for a short period of time, it may still undamaged. What will happen in the pore size in the membrane will expand and allow more contamination through. Run the unit on cold water for 15 minutes and test to make sure there is no issues.

Replacement Filters & Parts

Filter Cartridges:

GT4-6CRC	0.5uM Chloramine Carbon Block (Pre-Filter)	6 Months
GT4-1C	Clear Refillable Cannister (Post-Filter)	12-24 Months
GT5-12S	MB-115 Tulsion De-Ionising Resin	as Required
GT13-37-ALP	100GPD Reverse Osmosis Membrane	1 – 4 years (TDS Testing Required)

Fittings:

GT10-22LS	¼" Male x ¼" Tube Fitting
GT10-23LS	¼" Male Elbow x ¼" Tube Fitting
GT10-20LS	¼" Stem Run Tee
GT10-13LS	1/8" Male Elbow x ¼" Tube Fitting
GT10-71LS	¼" Stem x ¼" Tube Elbow

Valves:

GT25-3S1/4	Kitchen Tap Diverter Valve ¼"
GT25-15	Male x Male Thread Adapter 22 – 24mm
GT10-31-DM	¾" Outdoor Tap Adaptor
GT13-1S	200CC Flow Restrictor ¼"
GT15-33S + GT14-2LS	Laundry Block Adaptor & Valve

Housings:

GT8-31	1812 Membrane Housing
GT8-0S	10" x 2.5" Filter Housing White Dual O-Ring
GT8-38	10" x 2.5" Filter Housing Clear Dual O-Ring

Misc:

GT20-16GW	White Tubing
GT20-16GBLK	Black Tubing
GT20-16GB	Blue Tubing
GT20-16GY	Yellow Tubing
GT17-0S	Opening Spanner

Rev. 16/02/2021

FILTER SYSTEMS AUSTRALIA

Reverse Osmosis Portable Kits

Inline Filters / Housings

General Warranty

Water Filter Systems[1] (Excluding consumables) Manufactured or Assembled[2] by Filter Systems Australia (FSA) are covered under a 12-month Warranty Against Defects (Manufacturer's Warranty). This warrants the water filter system to be free from defects in material and workmanship for a period of 12 months from date of sale.

If applicable, FSA may cover the return freight in the form of a re-imbursement after the system has been inspected and confirmed it is a valid warranty claim.

FSA will not cover any labour charge incurred by the consumer for the replacement or repair of a product. The warranty is strictly parts only for the parts supplied by FSA. This warranty only applies to the original consumer of the product and is non-transferable. If you have purchased the system through a re-seller, please contact them to facilitate the warranty on your behalf. All replaced or exchanged parts become the property of FSA.

FSA does not cover the workmanship of the plumber who originally installed the system. Responsibility for damages that occur during installation fall with the plumber.

Qualification for Warranty

These systems are designed to be installed on existing tap connections. A plumber is not legally required for this type of installation unless a new tap or water outlet is required. The system is compliant to WaterMark AS/NZS 3497 and therefore is compliant with permanent installation – however the units are not designed to operate that way.

Filter systems must be maintained as per FSA recommendations[3] including the use of replacement filters, fittings and components supplied by FSA. Failure to maintain the filtration systems using FSA supplied/approved products may void warranty.

The warranty only applies if the product was used and/or installed in accordance with the user guide and/or installation instructions. This warranty is given in lieu of all other express or implied warranties and manufacturer shall in no circumstance be held liable for damages consequential or otherwise or delays caused or faulty manufacturing except as excluded by law.

Warranties need to be approved by FSA to ensure the product was not incorrectly used, installed or claimed. False and incorrect claims will be pursued at FSA's discretion including chargeable inspection and transit costs incurred.

FSA does not take responsibility for retaining customer records, it is the consumer's responsibility to retain all invoices or proof of purchase from the original sale and ongoing maintenance records as proof of upkeep.

Warranty Exclusions

FSA Standard Warranty shall be void if the product sustains damage or failure resulting from any of the following:

- If your system(s) fails to be maintained in accordance with recommended servicing and as per the manufacturers operating instructions.
- Unauthorised or abnormal use or operation.
- Exposure to unsuitable environmental conditions*.

Warranty – Australia

This warranty is given by Filter Systems Australia (Jacknel Pty Ltd ATF The J & N Family Trust). ABN 64 855 305 562 Located at 1/38 Jade Drive, Molendinar QLD 4214. Ph 07 5597 4585 & email info@filtersystemsaustralia.com.au

This warranty is provided in addition to other rights and remedies you have under law. Our products come with guarantees which cannot be excluded under the Consumer Guarantees Act.

Definitions

[1] Water Filter Systems are defined as systems designed for drinking water under our Water filter Systems, Reverse Osmosis Systems & Ultraviolet Sanitation Categories – Excluding Cartridges and Shower Filters.

[2] Other products not manufactured or assembled by FSA are covered under the applicable manufacturer's warranty.

[3] FSA specifies recommended or required filter maintenance – see product information for further details. If a maintenance schedule is not specified, filter maintenance is required at least once per 12 month period.

* Unsuitable environmental conditions include but are not limited to; Excessive hot or cold, Weather extremes.

Rev. 16/02/2021

Extended Warranty

Filter Systems Australia RO Portable Systems are eligible for an extended 4-year warranty (commencing no later than 12 months from sale date), to provide a total warranty of 5 years. This extended warranty is subject to terms and conditions outlined below. This extended warranty covers the below parts of the system.

- GT8-31 Reverse Osmosis Housing
- GT8-0S Twin O-ring White Housing (GT1-39 Models Only)
- GT8-38S Twin O-ring Clear Housing (GT1-39 Models Only)

The following components are also eligible for an extended 12-month warranty (commencing no later than 12 months from sale date), to provide a total warranty of 2 years. This extended warranty covers the below parts of the system.

- GT25-3S1/4 Diverter Valve
- GT10-31-DM DMfit ¾" Outdoor Tap Adaptor
- GT15-33S ¾" Laundry Block Adaptor
- GT14-2LS ¼" Inline Brass Tap
- GT13- 200/300/400 cc Flow Restrictor
- GT13-73LS 600cc Manual Flush Valve (GT1-39 Models Only)

Extended Warranty Qualification

Extended Warranty is valid only if the following conditions are met:

- All conditions under "Qualification for Warranty" are met.
- The System was installed in accordance with the manufacturer's instructions
- The system was maintained in accordance with FSA recommendations in Maintenance – Section II & III. Replacement Cartridges.
    - Cartridges must be purchased through FSA or participating supplier/reseller of FSA products
    - Proof of purchase for replacement filters required.

Definitions

[1] Water Filter Systems are defined as systems designed for drinking water under our Water filter Systems, Reverse Osmosis Systems & Ultraviolet Sanitation Categories – Excluding Cartridges and Shower Filters.

[2] Other products not manufactured or assembled by FSA are covered under the applicable manufacturer's warranty.

[3] FSA specifies recommended or required filter maintenance – see product information for further details. If a maintenance schedule is not specified, filter maintenance is required at least once per 12 month period.

* Unsuitable environmental conditions include but are not limited to; Excessive hot or cold, Weather extremes.